FPM-1150G

15" XGA Industrial Monitor with Resistive Touchscreen and VGA / HDMI Port



Features

- 15" XGA TFT LED LCD with 70,000 backlight life time
- Robust design with aluminum front panel
- Supports VGA or HDMI interface with USB touchscreen
- Supports panel, wall, desktop, or VESA arm mounting
- Lockable HDMI port (optional)

Introduction

In IoT and Industry 4.0, more and more customers need data to be visualized to help management decision making. FPM-1150G is an industrial-grade 15 TFT LCD monitor with LED backlight flat panel and a changeable front bezel (with updated appearance). FPM-1150G provides an entry level industrial monitor not only for industrial applications but also for a variety of IoT scenarios. The FPM-1150G front bezel can be changed to stainless steel for those applications requiring anti-corrosion or clean environments. In conclusion, FPM-1150G is a highly reliable, tough, and adaptable display solution for Industry 4.0 and IoT.

Specifications

General

- **Button Controls** Front iKey-type OSD buttons
- **Certification** CCC, CE, FCC, UL
- **Dimensions (W x H x D)** 392.3 x 313.6 x 51.2 mm (15.44" x 12.35" x 2.02")
- **Enclosure** Front panel: Die-casting aluminium, Rear cover: Die-casting aluminium
- **Mounting** Panel, wall, desktop, VESA arm
- **Power Input** External 60 W power adapter, with AC 100 V ~ 240 V input and DC +12 V @ 5 A output (included)
- **Video Port** VGA / HDMI
- **Weight (Net)** 4kg (8.82 lb)

LCD Display

- **Display Type** XGA TFT LCD with LED backlight
- **Display Size** 15"
- **Max. Resolution** 1024 x 768
- **Max. Color** 16.2M
- **Viewing Angle (H/V)°** 160°(V),140°(H)
- **Luminance (cd/m²)** 300
- **Backlight Life (hrs)** 70,000
- **Contrast Ratio** 2000:1

Touchscreen

- **Interface Combo** USB Interface
- **Lifespan** 36 million times with R8 silicone rubber finger, @ 2 250g presses per second
- **OS Support** WindowsR 7, 8, 10,11, XPe, CE and Linux

Environment

- **Operation Temperature** 0 ~ 50°C (32 ~ 122°F)
- **Storage Temperature** -20 ~ 60°C (-4 ~ 140°F)
- **Humidity (Storage)** 10 ~ 95% non-condensing
- **Waterproof** Front Panel IP65 Compliant
- **Vibration** 5 ~ 500 Hz, 1 Grms (operating, random)

Ordering Information

- **FPM-1150G-RVAE** 15" XGA Industrial monitor W/ res, touch & VGA input (adapter included)
- **FPM-1150G-RHAE** 15" XGA Industrial monitor W/ res, touch & HDMI input (adapter included)

All product specifications are subject to change without notice.

Dimensions

Unit: mm

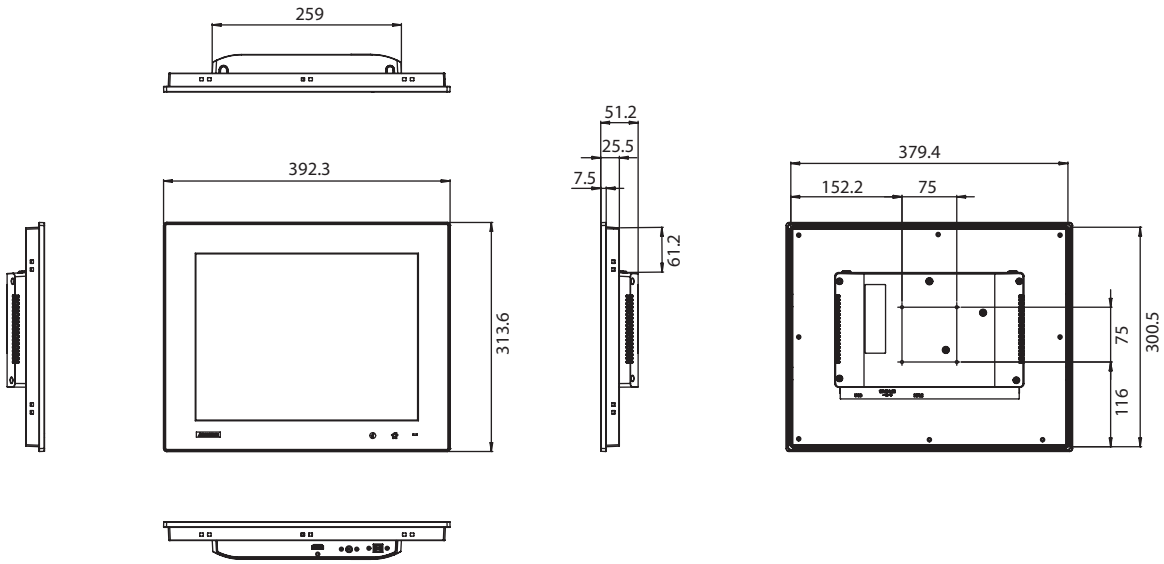

Cut-out Dimensions: 381.4 x 302.5 mm

Optional Accessories

- **FPM-1000T-SMKE** Desktop/Wall Mounting kit for FPM series
- **1702002605** Power Cable EU Plug 1.8 M
- **1702031801-11** Power Cable UK Plug 1.8 M
- **1700000596-11** Power Cable China/Australia Plug 1.8 M
- **1702002600** Power Cable US Plug 1.8 M

I/O View

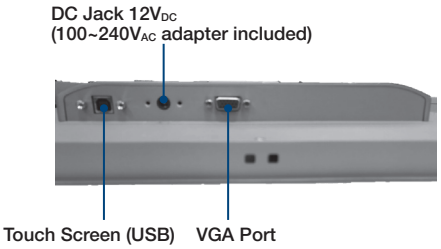

Front View



Rear View

