FPM-715W
FPM-721W
FPM-724W

15.6"/21.5"/23.8" Full HD Industrial Monitor with P-CAP Touch Control, Direct HDMI, DP and VGA Ports



Features

- 15.6"/21.5"/23.8" Full HD TFT LED LCD with true-flat touchscreen
- 16:9 wide screen aspect ratio, increases viewing area by 40%
- Supports 10-point multi-touch control via USB interface in Windows 7/8/10 OS
- Slim design enables easy installation
- Supports various mount options: panel, desktop, and VESA arm
- Touchscreen with reliable glass surface and P-CAP touch control
- Robust system with Die-casting aluminum chassis and IP66-rated aluminum alloy front bezel
- Lockable I/O connectors
- Supports various mount options: panel, wall, desktop, rack or VESA arm mounting

Introduction

In IIoT and Industry 4.0, more and more customers need data to be visualized to help process management and decision making. The FPM-715W/FPM-721W/FPM-724W are industrial-grade,widescreen monitor with sleek, simple lines and a true-flat touchscreen. Equipped with P-CAP 10-point multi-touch control and an IP66-rated front bezel,FPM-715W series is specifically designed for industrial applications. Moreover, FPM-715W/FPM-721W support a wide operating temperature range (-20 ~ 60 °C/-4 ~ 140 °F) and various mount options to make these monitors ideal for factory and machine automation display applications.

Specifications

General

Certification	BSMI, CCC, CE, FCC Class A, UL, CB, KC (FPM-724W)
Dimensions (W x H x D)	FPM-715W: 419.7 x 269 x 52 mm (16.52" x 10.59" x 2.04")
	FPM-721W: 558.4 x 349.8 x 53.2 mm (21.9" x 13.7" x 2.09")
	FPM-724W: 595.9 x 374.1 x 53 mm (23.4" x 13.7" x 2.08")
Enclosure	Front panel: Die-casting aluminium, Rear cover: Die-casting aluminium
Mount	Options Stand, Wall, Panel and VESA arm (75 x 75mm)
Power Input	Terminal Block: 24V_{DC} ± 20% input
Video Port	HDMI, DP, and VGA
USB	Rear I/O USB 2.0 type A
Weight (Net)	4kg (8.82 lb) / 7kg (15.43 lb)/ 7.8kg (17.20 lb)

LCD Display

Display Type	Full HD TFT LED LCD
Display Size	15.6"/21.5"/23.8"
Max. Resolution	1920 x 1080 / 1920 x 1080 /1920 x 1080
Max. Color	16.7M
Viewing Angle (H/V)°	160/160, 178/178, 178/178
Luminance (cd/m²)	450/350/350
Backlight Life (hrs)	50,000/30,000/30,000
Contrast Ratio	500:1/1000:1/1000:1

Touchscreen

Type	Projected capacitive touch
Interface	USB
OS Support	Windows® 7, 8, 10, 11, XPe, CE and Linux
Hardness	7H
Multi Touch	10 points, USB interface in Win 7/8/10, Linux
Touch Surface	Anti Glare (FPM-721W/FPM-724W)

Environment

Operating Temperature	-20 ~ 60 °C (-4 ~ 140 °F) 0 ~ 50 °C (32 ~ 122 °F) (FPM-724W only)
Storage Temperature	-30 ~ 70 °C (-22 ~ 158 °F)
Relative Humidity	Operating, 95% RH @ 40 °C, Non-Condensing Non-Operating, Operating, 95% RH @ 60 °C, Non-Condensing
Waterproof	Front Panel IP66 Compliant
Vibration	5 ~ 500 Hz, 1 Grms (Operating, Random)

Power Consumption

FPM-715W-P9AE	0.89 (Standby), 12.71 (Max)
FPM-721W-P9AE	0.155 (Standby), 34.21 (Max)
FPM-724W-P9AE	0.158 (Standby), 25.47 (Max)

Ordering Information

FPM-715W-P9AE	15.6" Full HD Ind. Monitor, w/ PCAP touch (Made in China)
FPM-715W-P9AU	15.6" Full HD Ind. Monitor, w/ PCAP touch (Made in Taiwan)
FPM-721W-P9AE	21.5" Full HD Ind. Monitor, w/ PCAP touch (Made in China)
FPM-721W-P9AU	21.5" Full HD Ind. Monitor, w/ PCAP touch (Made in Taiwan)
FPM-724W-P9AE	23.8" Full HD Ind. Monitor, w/ PCAP touch (Made in China)
FPM-724W-P9AU	23.8" Full HD Ind. Monitor, w/ PCAP touch (Made in Taiwan)

Optional Accessories

1702002600	Power Cable US Plug 1.8 M
1702002605	Power Cable EU Plug 1.8 M
1702031801-11	Power Cable UK Plug 1.8 M
1700000596-11	Power Cable China/Australia Plug 1.8 M
PWR-247-DE	Adapter 100-240V 60W 24V 2.5A
FPM-200W-ADKE	Adapter bracket for FPM-200W

Mounting kit

FPM-1000T-SMKE	Desktop Mounting kit for FPM series
PPC-174T-WL-MTE	Wall mount kit A800B
PPC-ARM-A03	ARM VESA Standard (A-CLEVER)
PPC-STAND-A1E	Stand mounting kit

All product specifications are subject to change without notice.

Dimensions

Unit: mm

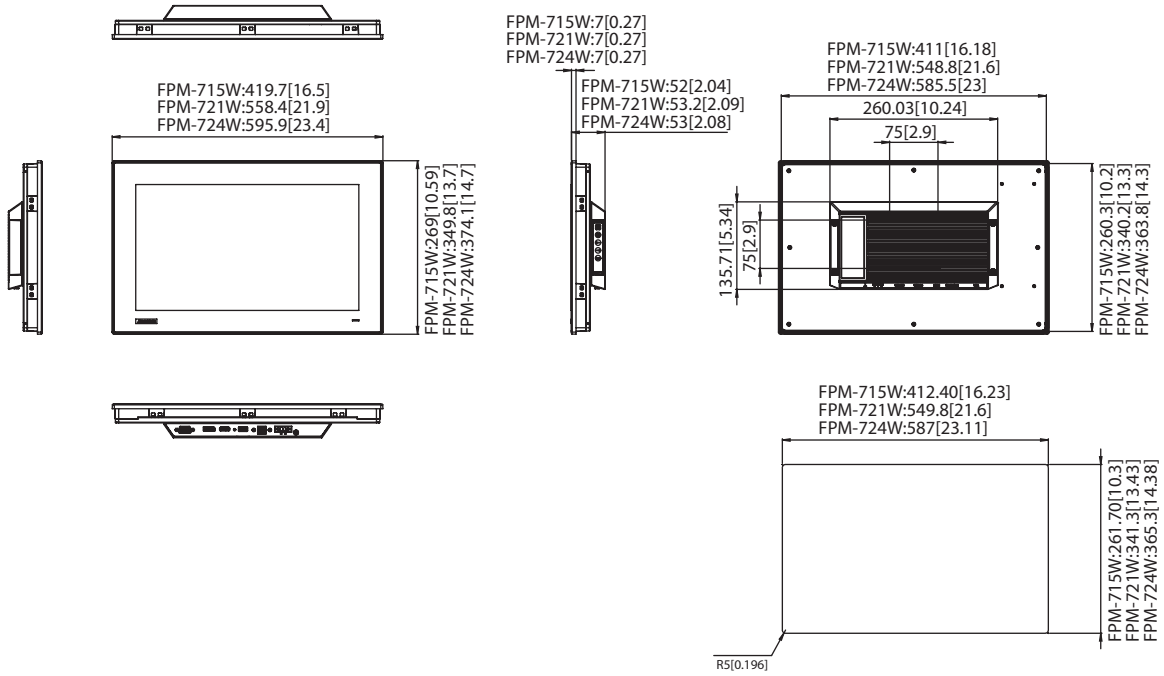

Panel Cutout Dimensions: **FPM-715W: 412.4-0.4 x 261.7-0.4 mm (16.24 x 10.30 in)**
FPM-721W: 549.8-0.4 x 341.3-0.4 mm (21.6 x 13.43 in)
FPM-724W: 587-0.4 x 365.3-0.4 mm (23.11 x 14.38 in)

Front View



Rear View



IO View

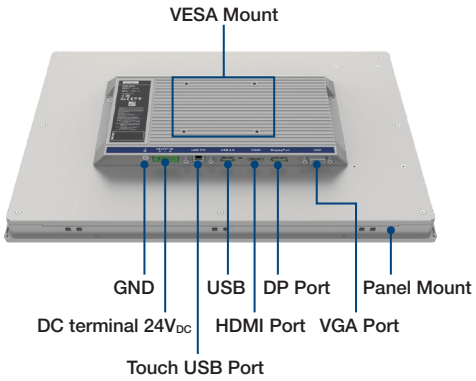

Packing List

Item	Part No.	Description	Qty	Note
Terminal Block	1652007930-01	Plug-In Block 1x3P/5.08mm/PA66/F/VA/Sn/GR/H15.0	1	
Clamper	1962055040	CLAMPER PPC-55 M1632611 A2	10	21.5": 12pcs 23.8": 14pcs
Clamper screw	1935042520	Screw M4x25L R/S D=8.3 H=2.5 (2+) ST BZn	10	21.5": 12pcs 23.8": 14pcs
GND cable	1703011001-11	A Cable G-TEM 4.3 100CM C=GR/Y	1	
USB touch Cable	1700017851-01	M Cable USB-A 4P(M)/USB-B 4P(M) 169CM (BK)	1	
VGA Cable	1700021332-11	M CABLE D-SUB 15P(M)/D-SUB 15P(M) 180CM VESA B1	1	
HDMI and DP lockable kit	1920002225-01	Nut M3 D=6.5 H=2.5 ST lockable for UNO-2271G	4	
HDMI and DP lockable kit	1930007462-01	Screw M3*55.2L - H=6.8 lockable for UNO-2271G	1	
HDMI and DP lockable kit	1990028810S000	Lock stopper (FWI-8CM-N2B)for UNO-2271G	2	