WOP-210K

10.1" WSVGA Operator Panel Installed with HMINavi Software



Features

- ARM9™ 32-bit RISC processor with 64 MB SDRAM working memory
- Supports over 500+ PLC industrial communication protocols
- Backup memory 128KB for retaining critical data or parameter
- Supports the HMINavi Designer development tool free on Windows 10
- Supports HMINavi Runtime data downloads through Serial, Ethernet, USB port
- No limitation on the internal I/Os points used for variety application
- Reliable firmware setting from HMINavi software for 24/7 operation
- Easy to switch one application to different LCD sizes in seconds
- Supports operation in both landscape and portrait mode
- Panel mount design ensures easy installation and IP66-rated front panel

Introduction

To fulfill the stringent standards of the automation market, especially for packaging, label slitting, and F&B applications, Advantech developed the WOP-200K series for diverse operations that involve PLCs, thermal controllers, inverters, and sensors. Powered by an ARM9™ 32-bit RISC processor with 64 MB working memory, the WOP-200K series systems are available with LCDs of varying size (from 4.3" to 15"). Additionally, WOP-200K systems are bundled with Advantech's HMINavi software – a human-machine interface designed for HMI applications to reduce labor and improve manufacturing efficiency through visualization. Powerful connectivity drivers support 500+ variety market brands of PLC.

Specifications

General

- **Certification** CE, FCC, UL61010
- **Dimensions (W x H x D)** 270.1 x 212.1 x 43.4mm (10.63' x 8.35' x 1.71')
- **Cutout Dimensions** 259.5 x 201.5mm (10.22' x 7.93')
- **Front Panel Thickness** 6 mm (0.23 in)
- **Operating System** HMI RTOS, HMINavi Designer
- **Power Supply Voltage** $24V_{DC}$ ± 10%, Isolation
- **Power Consumption** 20W
- **Enclosure Housing** Plastic
- **Mount Options** Panel
- **Weight (Net)** 1.1 kg (2.43 lbs)

System Hardware

- **CPU** ARM9™ 32-bit RISC processor
- **Battery Backup Memory** 128KB
- **Working Memory** 64 MB SDRAM
- **Storage** 128 MB NAND Flash
  Runtime Max Size: 64 MB
  Data Logger Max Size: 64 MB

Communication Interface

- **COM1** RS-232 (DB9 Female)
- **COM2** RS-422/485 (COM1: Pin 1, 4, 5, 6, 9)
- **COM3** RS-485 (COM1: Pin 5, 7, 8)
- **Ethernet (RJ45)** 10/100-BaseT
- **I/Os** 1 x USB (Client)
  1 x USB (Host)

LCD and Touchscreen

- **Display Type** WSVGA TFT LCD
- **Display Size** 10.1"
- **Max. Resolution** 1024 x 600
- **Max. Colors** 65,536 colors
- **Luminance (cd/m²)** 350
- **Backlight Life** LED, 20,000 hr
- **Touchscreen** 4 wires analog resistive

Environment

- **Operating Temperature** -15 ~ 65°C (5 ~ 149°F)
- **Storage Temperature** -20 ~ 70°C (-4 ~ 158°F)
- **Humidity** 95% RH @ 40°C, non-condensing
- **Ingress Protection** Front panel: IP66
- **Vibration Protection** 5 ~ 500Hz (X,Y,Z direction, 1Grms, 1hour per axis)

Ordering Information

- **WOP-210K-NAE** 10.1" WSVGA, 64MB, 128MB(NAND), Serial x3, Ethernet
- **WOP-210K-SAE** 10.1" WSVGA, 64MB, 128MB(NAND), Serialx3

All product specifications are subject to change without notice.

Dimensions

Unit: mm [inch]

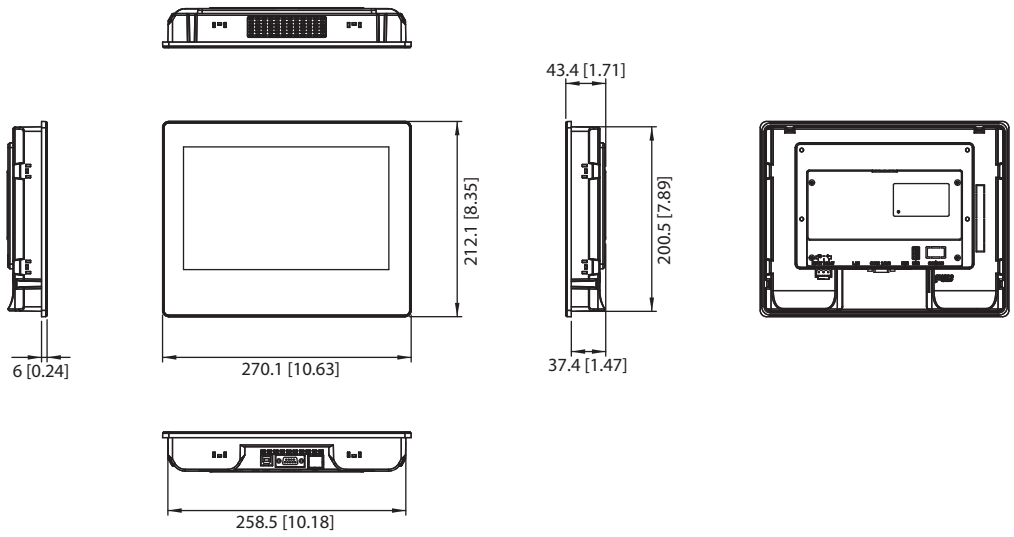

Panel Cutout Dimensions: 259.5 x 201.5 mm (10.22 x 7.93 in)

Optional Accessories

DIN-Rail Type Power Supply Module

- **PSD-A60W24** DIN RAIL A/D 100-240V 60W 24V
- **PSD-A120W24** DIN RAIL A/D 100-240V 120W 24V

Rear View



Communication Links

Direct Link

1-to-1 Connection

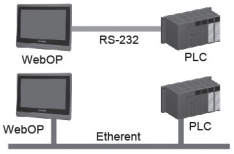

1-to-N Connection

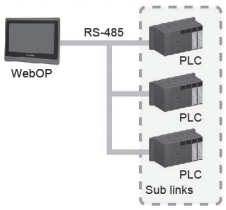

N-to-1 Data Sharing Connection

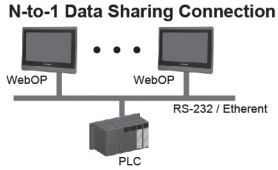

In-Direct Link

2-to-1 Connection

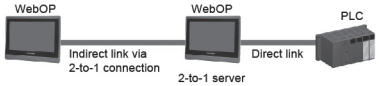

N-to-1 Connection

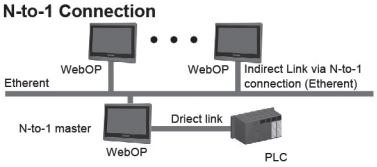

2-to-1 Transparent Connection

