FPM-815S

15" XGA Industrial Monitor with Resistive Touch Control, Direct VGA, DP Ports, and 304 Stainless Steel Front Bezel

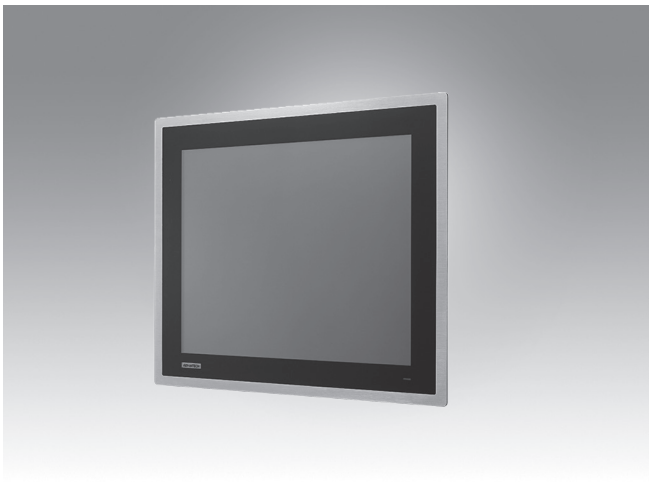

Features

- 15" XGA TFT LED LCD with 70K backlight lifetime
- Robust design with 304 stainless steel front bezel and anti-rust coated SPCC rear cover
- Wide operating temperature range (-20 ~ 60 °C/-4 ~ 140 °F)
- Increased reliability with enhanced 5-wire resistive touch sensor
- Anti-glare screen with tempered glass and IP66-certified front panel
- Direct VGA+DP video input interface
- OSD control pad with lockable function on rear panel
- Supports panel, VESA, wall, desktop, and stand mounting

Introduction

The FPM-800S series are rugged industrial monitors that support a wide operating temperature range (-20 ~ 60 °C/-4 ~ 140 °F), making them suitable for diverse applications. The true-flat front panel is IP66 rated for protection from water and dust to ensure easy cleaning. With the provision of a 304 stainless steel front bezel, FPM-800S is especially suitable for operation in hazardous and strict hygiene environments.

Specifications

General

- **OSD Controls** OSD control pad on rear panel with lockable function, 2 x user-defined contrast/brightness settings
- **Certification** CE, FCC Class A, BSMI, CCC, UL
- **Dimensions (W x H x D)** 405.3 x 329.4 x 59.3 mm (15.96 x 12.97 x 2.33 in)
- **Enclosure** Front panel: 304 stainless steel bezel
Rear cover: SPCC with anti-rust coating
- **Mount Options** Panel, wall, desktop, VESA arm
- **Power Input** Phoenix jack: 24 V_{DC} input
- **Power Consumption** 12W +20%
- **Video Port** VGA+DP
- **Weight (Net)** 5.4 kg (11.90 lb)

LCD Display

- **Display Type** XGA TFT LCD
- **Backlight Type** LED
- **Display Size** 15"
- **Max. Resolution** 1024 x 768
- **Max. Color** 16.7M
- **Viewing Angle (H/V)** 176°/176°
- **Luminance** 500 cd/m^2
- **Backlight Life** 70,000 hr
- **Contrast Ratio** 2500:1

Touchscreen

- **Driver** Penmount 6000
- **Type** 5-wire resistive with enhanced ITO film
- **Interface** USB
- **Lifespan** 36 million with a silicone rubber R8 finger, writing rate is by 250g at 2 times/s
- **Light Transmission** > 80%
- **OS Support** Windows® 7, 8, 10,11, XPe, CE and Linux

Environment

- **Operating Temperature** -20 ~ 60 °C (-4 ~ 140 °F)
- **Storage Temperature** -30 ~ 70 °C (-22 ~ 158 °F)
- **Humidity (Storage)** 10 ~ 90% non-condensing
- **IP Rating** IP66-rated front panel
- **Shock** 11 ms, 10G (non-operating, half-sine wave)
- **Vibration** 5 ~ 500 Hz, 1 Grms (operating, random)

Ordering Information

- **FPM-815S-R6AE** 15" XGA industrial monitor with stainless steel front bezel, wide operating temperature, and resistive touchscreen

All product specifications are subject to change without notice.

Dimensions

Unit: mm

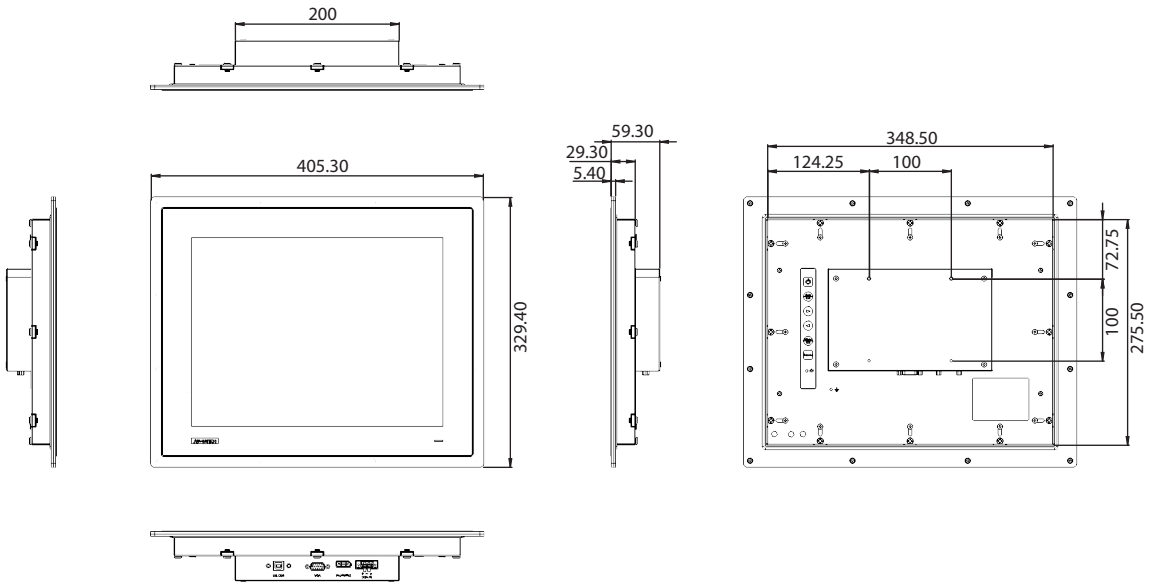

Panel Cutout Dimensions: 350 x 277 mm (13.78 x 10.91 in)

Optional Accessories

- **1702002600** Power cable US plug 1.8 M
- **1702002605** Power cable EU plug 1.8 M
- **1702031801-11** Power cable UK plug 1.8 M
- **1700000596-11** Power cable China/Australia plug 1.8 M
- **PWE-247-DE** Adapter 100 ~ 240V 60W 24V 2.5A

Mounting kit

- **FPM-1000T-SMKE** Desktop Mounting kit for FPM series
- **PPC-174T-WL-MTE** Wall mount kit A800B
- **PPC-ARM-A03** ARM VESA Standard (A-CLEVER)
- **PPC-STAND-A1E** Stand mounting kit

Front View

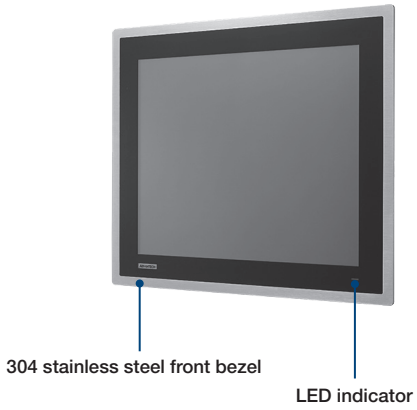

Rear View

