FPM-3151G

15" XGA Industrial Monitor with Resistive Touch Control, Direct VGA, DVI Ports, and Wide Operating Temperature



Features

- 15" XGA TFT LED LCD with 50K backlight lifetime
- Robust anodized aluminum-coated front bezel and stainless steel rear cover
- Wide operating temperature range (-20 ~ 60 °C/-4 ~ 140 °F)
- Increased reliability with enhanced 5-wire resistive touch sensor
- Anti-glare screen with tempered glass and IP65-certified front panel
- Ground isolation protection for entire system
- Supports VGA/DVI input, dual touch interfaces, and two power inputs
- Front-lockable OSD keys with user-defined functions
- IP65-rated front panel
- Supports panel, VESA, wall, desktop, and stand mounting

Introduction

The FPM-3151G is an extremely rugged and reliable 15" XGA industrial monitor aimed at diverse industrial applications. Equipped with a hard anodized-aluminum coating, stainless steel chassis, and wide operating temperature range (-20 ~ 60 °C/-4 ~ 140 °F), FPM-3151G can withstand operation in a wide range of harsh industrial environments. This monitor also features enhanced 5-wire resistive touch control and overall ground isolation protection to enhance the system's reliability. Additionally, the FPM-3151G is equipped with lockable OSD keys on the front panel that control two user-defined function settings.

Specifications

General

- **OSD Controls** OSD control pad on front panel with lockable function
  Two user-defined contrast/brightness settings
- **Certification** CE, FCC Class A, BSMI, CCC, UL, Energy Star
- **Dimensions (W x H x D)** 422 x 310 x 70 mm (16.61 x 12.2 x 2.76 in)
- **Enclosure** Front panel: Aluminum with hard anodizing coating
  Rear cover: Stainless steel with
  ground isolation protection
- **Mount Options** Panel, wall, desktop, VESA arm
- **Power Input** Phoenix Jack: 24 V_{DC} input
  DC Jack: 12 V_{DC} input
- **Power Consumption** 12W +20%
- **Video Port** VGA & DVI-D Port
- **Weight (Net)** 7.73 kg (17.04 lbs)

LCD Display

- **Display Type** XGA TFT LCD
- **Backlight Type** LED
- **Display Size** 15"
- **Max. Resolution** 1024 x 768
- **Max. Color** 16.2M (RGB 8-bit)
- **Viewing Angle (H/V °)** 160/140
- **Luminance (cd/m²)** 350
- **Backlight Life** 50,000 hr
- **Contrast Ratio** 700:1

Touchscreen

- **Driver** Penmount 6000
- **Type** 5-wire resistive with enhanced ITO film
- **Interface** USB & RS-232 (Combo)
- **Lifespan** 36 million with a silicone rubber R8 finger,
  writing rate is by 250g at 2 times/s
- **Light Transmission** > 80%
- **OS Support** Windows XP, 2000, Vista, 7, 8, 10, 11, XP Embedded, CE, Linux
- **Power Consumption** +5 V @ 100 mA
- **Touch Resolution** Linearity

Environment

- **Operating Temperature** -20 ~ 60 °C (-4 ~ 140 °F)
- **Storage Temperature** -30 ~ 80 °C (-22 ~ 176 °F)
- **Humidity (Storage)** 90% @ 50 °C non-condensing
- **IP Rating** Front panel is IP65 compliant
- **Shock** 11ms, 10G (Non Operating, Half Sine Wave)
- **Vibration** 5 ~ 500 Hz, 1 Grms (Operating, Random)

Ordering Information

- **FPM-3151G-R3BE** 15" XGA Ind. Monitor w/ Wide Temp, Resistive TS

Optional Accessories

- **1702002600** Power Cable US Plug 1.8 M
- **1702002605** Power Cable EU Plug 1.8 M
- **1702031801-11** Power Cable UK Plug 1.8 M
- **1700000596-11** Power Cable China/Australia Plug 1.8 M
- **PWR-247-DE** Adapter 100-240V 60W 24V 2.5A
- **FPM-200W-ADKE** Adapter bracket for 200W

Mounting kit

- **FPM-1000T-SMKE** Desktop Mounting kit for FPM series
- **PPC-174T-WL-MTE** Wall mount kit A800B
- **PPC-ARM-A03** ARM VESA Standard (A-CLEVER)
- **PPC-STAND-A1E** Stand mounting kit
- **FPM-3151G-RMKE** FPM-3151G Rack-Mount Kit

All product specifications are subject to change without notice.

Dimensions

Unit: mm [inch]

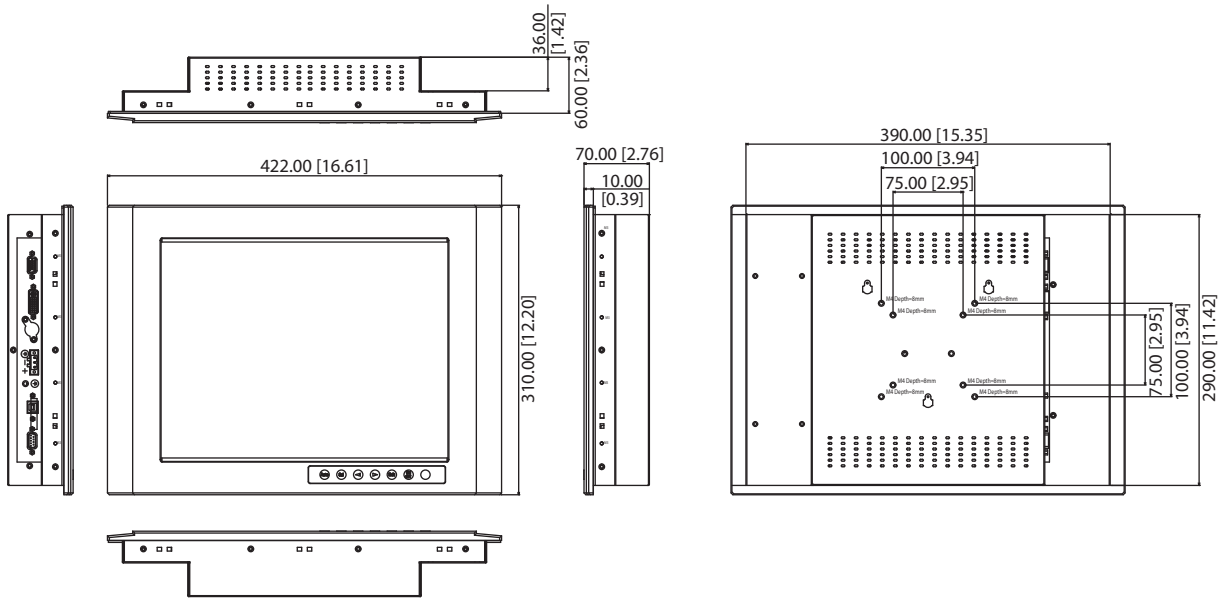

Panel Cutout Dimensions: 392 x 292 mm (15.43 x 11.49 in)

I/O View

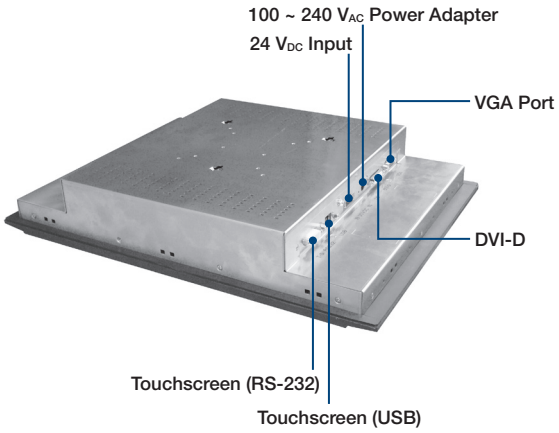

Rackmount (FPM-3151G-RMKE)



Packing list

Item	Part No.	Description	Qty
Terminal Block	1652007930-01	Plug-In Block 1x3P/5.08mm/PA66/F/VA/Sn/GR/H15.0 (24V_{DC} only)	1
Clamper	1962055040	CLAMPER PPC-55 M1632611 A2	10
Clamper screw	1935042520	Screw M4*25L R/S D=8.3 H=2.5 + ST BZn	10
GND cable	1703011001-11	A Cable G-TEM. 100CM C=GR/Y PPC-55	1
VGA cable	1700021332-11	M CABLE D-SUB 15P(M)/D-SUB 15P(M) 180CM VESA B1	1
USB touch Cable	1700017851-01	M Cable USB-A(M)/USB-B(M) 180CM black color	1
RS232 cable	1700091800	M Cable D-SUB 9P(M)/D-SUB 9P(F) 183CM	1