FPM-7121T

12.1" XGA Industrial Monitor with Resistive Touch Control, Direct VGA/DP, and Wide Operating Temperature Range



Features

- 12.1" XGA TFT LED LCD with 50K backlight lifetime
- Robust system with IP66-rated aluminum front panel
- Wide operating temperature range (-20 ~ 60 °C/-4 ~ 140 °F)
- Anti-glare touchscreen with tempered glass
- Supports various mount options: panel, wall, desktop, and VESA arm
- Combo RS-232+USB interface for touchscreen functionality
- OSD control buttons on rear panel
- Lockable I/O connectors

Introduction

FPM-7000T series monitors are the first, true-flat, 4:3, industrial-grade monitors. The 5-wire resistive touchscreen is enclosed in a highly durable, die cast aluminum alloy front bezel that provides IP66-rated protection from water and dust ingress. Additionally, the FPM-7000T series monitors support a wide operating temperature range (-20 ~ 60 °C/-4 ~ 140 °F) and various mount options to ensure easy installation and support for diverse environments.

Specifications

General

- **OSD Controls** OSD control buttons on rear panel
- **Certification** BSMI, CCC, CE, FCC Class A, UL
- **Dimensions (W x H x D)** 311.8 x 238 x 44.5 mm (12.28 x 9.37 x 1.76 in)
- **Enclosure** Front panel: Die cast magnesium alloy
Rear cover: SECC
- **Mount Options** Stand, Wall, Panel and VESA 75x75 & 100x100mm
- **Power Input** Phoenix Jack: 24 V_{DC} input
- **Power Consumption** 15 W + 20%
- **Video Port** VGA & DP
- **Weight (Net)** 2.6 kg (5.73 lb)

LCD Display

- **Display Type** XGA TFT LED LCD
- **Display Size** 12.1"
- **Max. Resolution** 1024 x 768
- **Max. Color** 16.2M
- **Viewing Angle (H/V °)** 160/140
- **Luminance (cd/m²)** 600
- **Backlight Life** 50,000 hr
- **Contrast Ratio** 700 :1

Touchscreen

- **Type** 5-wire, analog resistive
- **Interface** RS-232 and USB
- **Light Transmission** Above 75%
- **OS Support** Windows XP, Vista, 7, 8, 10, 11, XPe and Linux

Environment

- **Operating Temperature** -20 ~ 60 °C (-4 ~ 140 °F)
- **Storage Temperature** -30 ~ 70 °C (-22 ~ 158 °F)
- **Humidity (Storage)** 10 ~ 90% non-condensing
- **IP Rating** Front panel is IP66 compliant
- **Vibration** 5 ~ 500 Hz, 1 Grms (Operating, Random)

Ordering Information

- **FPM-7121T-R3AE** 12.1" XGA Ind Monitor w/Resistive TS (VGA/DP)

Optional Accessories

- **1702002600** Power Cable US Plug 1.8 M
- **1702002605** Power Cable EU Plug 1.8 M
- **1702031801-11** Power Cable UK Plug 1.8 M
- **1700000596-11** Power Cable China/Australia Plug 1.8 M
- **PWR-247-DE** Adapter 100-240V 60W 24V 2.5A
- **FPM-200W-ADKE** Adapter bracket for FPM-200W

Mounting kit

- **FPM-1000T-SMKE** Desktop Mounting kit for FPM series
- **PPC-174T-WL-MTE** Wall mount kit A800B
- **PPC-ARM-A03** ARM VESA Standard (A-CLEVER)
- **PPC-STAND-A1E** Stand mounting kit

All product specifications are subject to change without notice.

Dimensions

Unit: mm

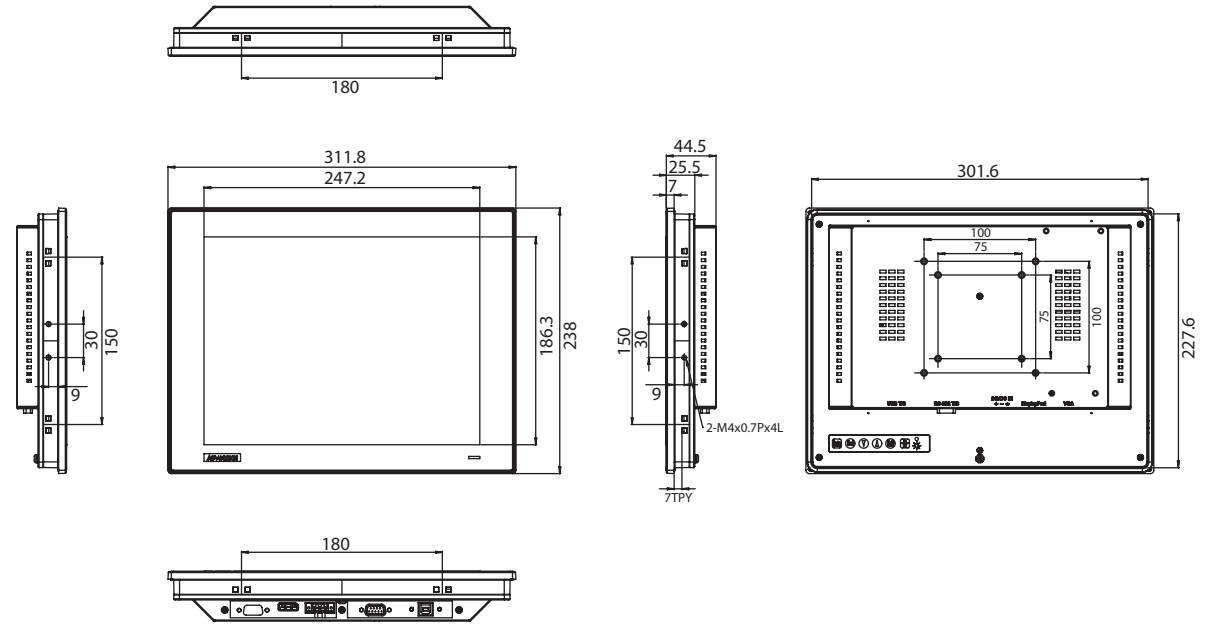

Panel Cutout Dimensions: 303 x 229 mm (11.93 x 9.02 in)

Front View



Rear View

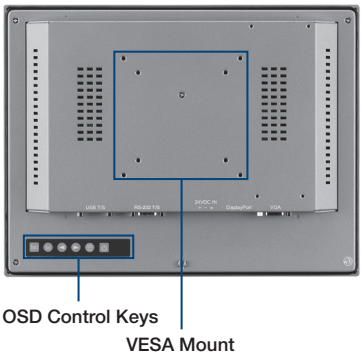

I/O View

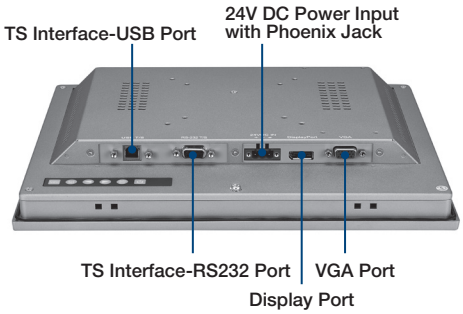

Packing list

Item	Part No.	Description	Qty
Clamper	1962055040	CLAMPER PPC-55 M1632611 A2	10
Clamper screw	1935042520	Screw M4*25L R/S D=8.3 H=2.5 + ST BZn	10
USB touch Cable	1700017851-01	M Cable USB-A(M)/USB-B(M) 180CM black color	1
VGA cable	1700021332-11	M CABLE D-SUB 15P(M)/D-SUB 15P(M) 180CM VESA B1	1
GND cable	1703011001-11	A Cable G-TEM. 100CM C=GR/Y PPC-55	1
Terminal Block	1652007930-01	Plug-In Block 1x3P/5.08mm/PA66/F/VA/Sn/GR/H15.0 ($24V_{DC}$ only)	1
RS232 cable	1700022770-01	M cable D-SUB 9P(M)/D-SUB 9P(F) 2M DAC-ST01	1