FPM-7061T

6.5" VGA Industrial Monitor with Resistive Touch Control, Direct VGA/DP, and Wide Operating Temperature



Features

- 6.5" VGA TFT LED LCD with 50K backlight lifetime
- Robust system with IP66-rated aluminum front panel
- Wide operating temperature range (-20 ~ 60 °C/-4 ~ 140 °F)
- Anti-glare touchscreen with tempered glass
- Supports various mount options: panel, wall, desktop, and VESA arm
- USB interface for touchscreen functionality
- OSD control buttons on rear panel
- Lockable I/O connectors

Introduction

FPM-7000T series monitors are the first, true-flat, 4:3, industrial-grade monitors. The 5-wire resistive touchscreen is enclosed in a highly durable, die cast aluminum alloy front bezel that provides IP66-rated protection from water and dust ingress. Additionally, the FPM-7000T series monitors support a wide operating temperature range (-20 ~ 60 °C/-4 ~ 140 °F) and various mount options to ensure easy installation and support for diverse environments.

Specifications

General

OSD Controls	OSD control buttons on rear panel
Certification	BSMI, CCC, CE, FCC Class A, UL, KC
Dimensions (W x H x D)	199 x 152 x 46.1 mm
Enclosure	Front panel: Die cast magnesium alloy Rear cover: SECC
Mount Options	Stand, Wall, Panel mount or VESA 75 x 75 mm
Power Input	Phoenix Jack: 24 V_{DC} input
Power Consumption	10 W + 20%
Video Port	VGA & DP
Weight (Net)	1.2 kg (2.64 lb)

LCD Display

Display Type	VGA TFT LED LCD
Display Size	6.5"
Max. Resolution	640 x 480
Max. Color	16.2M
Viewing Angle (H/V °)	160/140
Luminance (cd/m²)	800
Backlight Life	50,000 hr
Contrast Ratio	600 :1

Touchscreen

Type	5-wire analog resistive
Interface	USB
Light Transmission	Above 75%
OS Support	Windows XP, Vista,7, 8,10,11, XPe and Linux

Environment

Operating Temperature	-20 ~ 60 °C (-4 ~ 140 °F)
Storage Temperature	-30 ~ 70 °C (-22 ~ 158 °F)
Humidity (Storage)	10 ~ 90% non-condensing
IP Rating	Front panel is IP66 compliant
Vibration	5 ~ 500 Hz, 1 Grms (Operating, Random)

Ordering Information

FPM-7061T-R3AE	6.5" VGA Ind Monitor w/Resistive TS (VGA/DP)

Optional Accessories

1702002600	Power Cable US Plug 1.8 M
1702002605	Power Cable EU Plug 1.8 M
1702031801-11	Power Cable UK Plug 1.8 M
1700000596-11	Power Cable China/Australia Plug 1.8 M
PWR-247-DE	Adapter 100-240V 60W 24V 2.5A

Mounting kit

FPM-1000T-SMKE	Desktop Mounting kit for FPM series
PPC-174T-WL-MTE	Wall mount kit A800B
PPC-ARM-A03	ARM VESA Standard (A-CLEVER)
PPC-STAND-A1E	Stand mounting kit

All product specifications are subject to change without notice.

Dimensions

Unit: mm

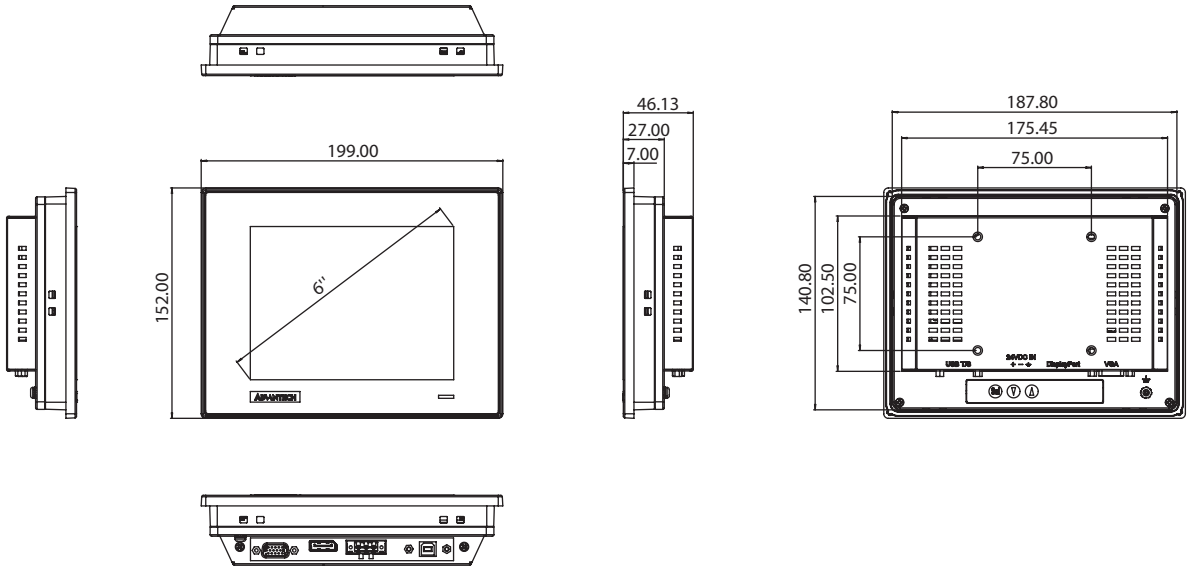

Panel Cutout Dimensions: 189.1 x 142.1 mm (7.44 x 5.59 in)

Front View



Rear View

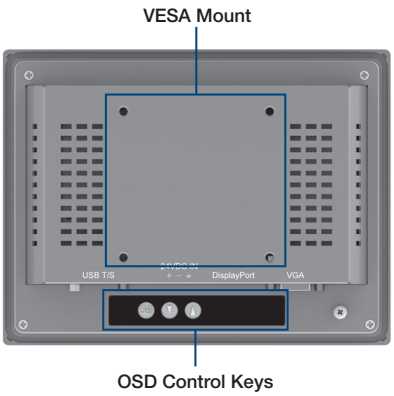

I/O View

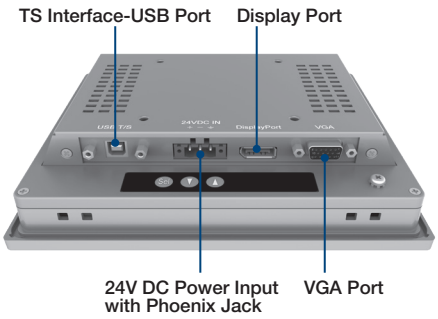

Packing list

Item	Part No.	Description	Qty
Clamper	1962055040	CLAMPER PPC-55 M1632611 A2	6
Clamper screw	1935042520	Screw M4*25L R/S D=8.3 H=2.5 + ST BZn	6
USB touch Cable	1700017851-01	M Cable USB-A(M)/USB-B(M) 180CM black color	1
RS232 cable	1700091800	M Cable D-SUB 9P(M)/D-SUB 9P(F) 183CM	1
VGA cable	1700021332-11	M CABLE D-SUB 15P(M)/D-SUB 15P(M) 180CM VESA B1	1
GND cable	1703011001-11	A Cable G-TEM. 100CM C=GR/Y PPC-55	1
Terminal Block	1652007930-01	Plug-In Block 1x3P/5.08mm/PA66/F/VA/Sn/GR/H15.0 ($24V_{DC}$ only)	1