FPM-S Series

Interchangeable Slim Bezel Display Modules for TPC-B300/B510/B520/B610/B620

Interchangeable Display Modules with 15.6" FHD / 18.5" FHD / 21.5" FHD



Features

- Modular front display design in three application-based module categories, enabling flexible configurations
- Front panel module with P-CAP multi-touch sensor available in various sizes
- Industrial-grade LED LCD
- System status LED indicators in front panel
- IP66-rated front panel and panel mount
- Rear mounted computing box or monitor box module is compulsory to activate display module

Introduction

Advantech's Slim bezel modular display series offers various display modules ranging between 15.6" and 21.5" inches in size to go with selections of computing boxes (TPC-TPC-B300/TPC-B510/TPC-B520/B520L/TPC-B610/TPC-B620) for multiple configurations that can be flexibly adapted to various scenarios. Modular display series are equipped with industrial grade LCD and Projected Capacitive touch screens, providing the best user experience and reliable operation. The modular design ensures flexible configuration and easy maintenance/upgrades. Its robust enclosure is equipped with a die-cast aluminum alloy front bezel and IP66 rating for protection from dust and water ingress.

Specifications

Part Number for Cost Effective version		FPM-S15W	FPM-S18W	FPM-S21W
LCD Panel	Display Size	15.6"	18.5"	21.5"
	Display Type	FHD TFT LED LCD	FHD TFT LED LCD	FHD TFT LED LCD
	Aspect Ratio	16:9		
	Max. Resolution	1920 x 1080	1920 x 1080	1920 x 1080
	Max. Color	16.2M	16.7M	16.7M
	Luminance	500ntis	350ntis	250ntis
	Viewing Angle (H/V)	178°/178°	170°/160°	178°/178°
	Backlight Life	50000hr	50000hr	50000hr
	Contrast Ratio	800:1	1000:1	1000:1
Touchscreen	Type	PCAP	PCAP	PCAP
	Light Transmission	Above 90%	Above 90%	Above 90%
	Anti-Glare Treatment	Yes	Yes	Yes
Environment	Operating Temperature	0 ~ 50°C	-10 ~ 60°C	0 ~ 55°C
	Storage Temperature	-20 ~ 60°C	-20 ~ 60°C	-20 ~ 60°C
	Ingress Protection	Font IP66	Font IP66	Font IP66
Housing Color	Panel Frame and Back Cover	Pantone 432C	Pantone 432C	Pantone 432C

Ordering Information

Panel Module P/N	FPM-S15W-A**	FPM-S18W-A	FPM-S21W-A
Description	15.6" FHD TFT LED LCD SLIM	18.5" FHD TFT LED LCD SLIM	21.5" FHD TFT LED LCD SLIM

Note: Display modules cannot work independently. A computing box (TPC-B300/B510/B520/B520L/B610/B620) is compulsory to operate the display module.
**TPC-B610/B620 does not support FPM-S15W-A

Configurable Rear Computing Box

Box Module P/N	Description
TPC-B300-J20A	Intel® Celeron® J6412 2.6 GHz Processor (10W)
TPC-B300-E20A	Intel® Atom™ X6425E 3.0 GHz Processor (12W)
TPC-B510-833BE	Intel® Core™ i3-8145UE 2.20GHz Dual-core Processor, 8G DDR4 RAM
TPC-B510-873BE	Intel® Core™ i7-8665UE 1.70GHz Quad-core Processor, 8G DDR4 RAM
TPC-B510-853BE	Intel® Core™ i5-8365UE 1.60 GHz Quad-core Processor, 8G DDR4 RAM
TPC-B520-D50A	Intel® Core™ i5-1335UE 1.3GHz Deca-core Processor
TPC-B520-D70A	Intel® Core™ i7-1365URE 1.7GHz Deca-core Processor
TPC-B610H-A00A	Intel® 10th Gen. Core™ i CPU Socket (LGA1200), H420E, PCIex16, PCI
TPC-B610W-A00A	Intel® 10th Gen. Core™ i CPU Socket (LGA1200), W480E, PCIex16, PCIex4, NVMe, RAID 0/1, ECC

* Panel size compatibility list
S15W: B300 / B510 / B520
S18W: B300 / B510 / B520 / B610
S21W: B300 / B510 / B520 / B610

All product specifications are subject to change without notice.
Last updated: 18-Dec-2025

Dimensions

Unit: mm

FPM-S15W

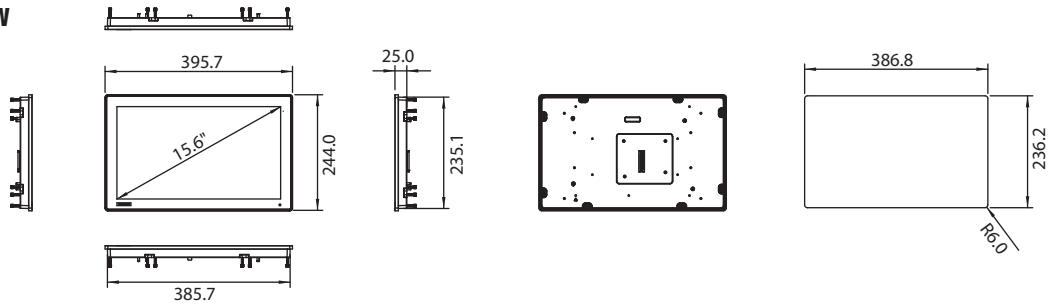

FPM-S18W

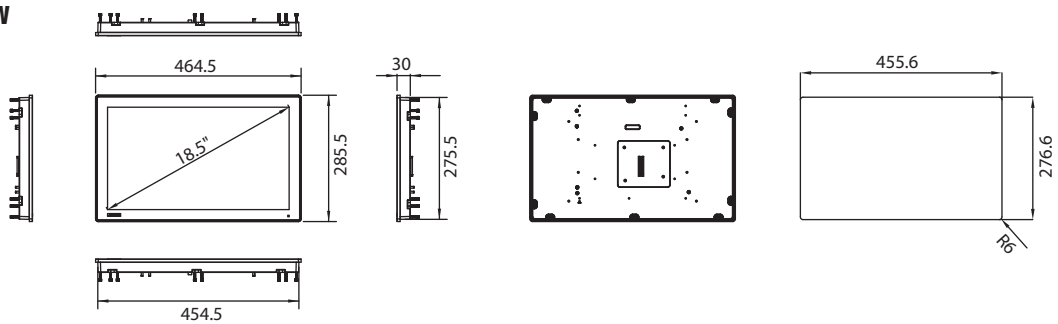

FPM-S21W

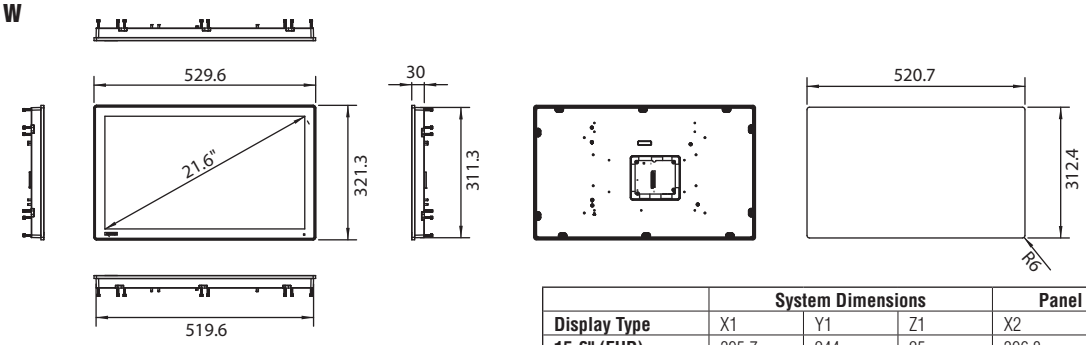

	System Dimensions			Panel Mount	
Display Type	X1	Y1	Z1	X2	Y2
15.6" (FHD)	395.7	244	25	396.8	236.2
18.5" (FHD)	464.5	285.5	30	455.6	276.6
21.5" (FHD)	529.6	321.3	30	520.7	312.4

Packing List

FPM-S15W-A

Item	Part No.	Depiction	Qty
WARRANTY	2190000902	CARDBOARD-WARRANTY REV. A2	1

FPM-S18W-A

Item	Part No.	Depiction	Qty
WARRANTY	2190000902	CARDBOARD-WARRANTY REV. A2	1

FPM-S21W-A

Item	Part No.	Depiction	Qty
WARRANTY	2190000902	CARDBOARD-WARRANTY REV. A2	1

Please note: If some optional modules are offered with the system, additional system certificates may be required in certain regions/countries.
Please contact Advantech for certificate compliance.

Photo

example: FPM-S15W



